"THIS DRAWING HAS BEEN PREPARED BY THE GOVERNMENT AND MAY BE REPRODUCED BY ANY PERSON IN CONNECTION WITH ANY GOVERNMENT PROCUREMENT OR MAINTENANCE OPERATION."

ENGRAVE:
R-390A/URR
RECEIVER
FRAME ASSY.
CHECK LOC. OF 4 MTG.
HOLES & VOLUME FOR
AUDIO SUB-CHASSIS
IN MAIN FRAME
SIG. C., INEP
57324
(MFR'S NAME OR SYMBOL)

NOTE:
*FOR INFORMATION ONLY. CONTRACTOR MAY AT HIS OPTION DEVIATE FROM THESE PROCESS DETAILS

REVISIONS ORIGINAL ISSUE 15-10-55			
SYM	DESCRIPTION	DATE	APPROVAL

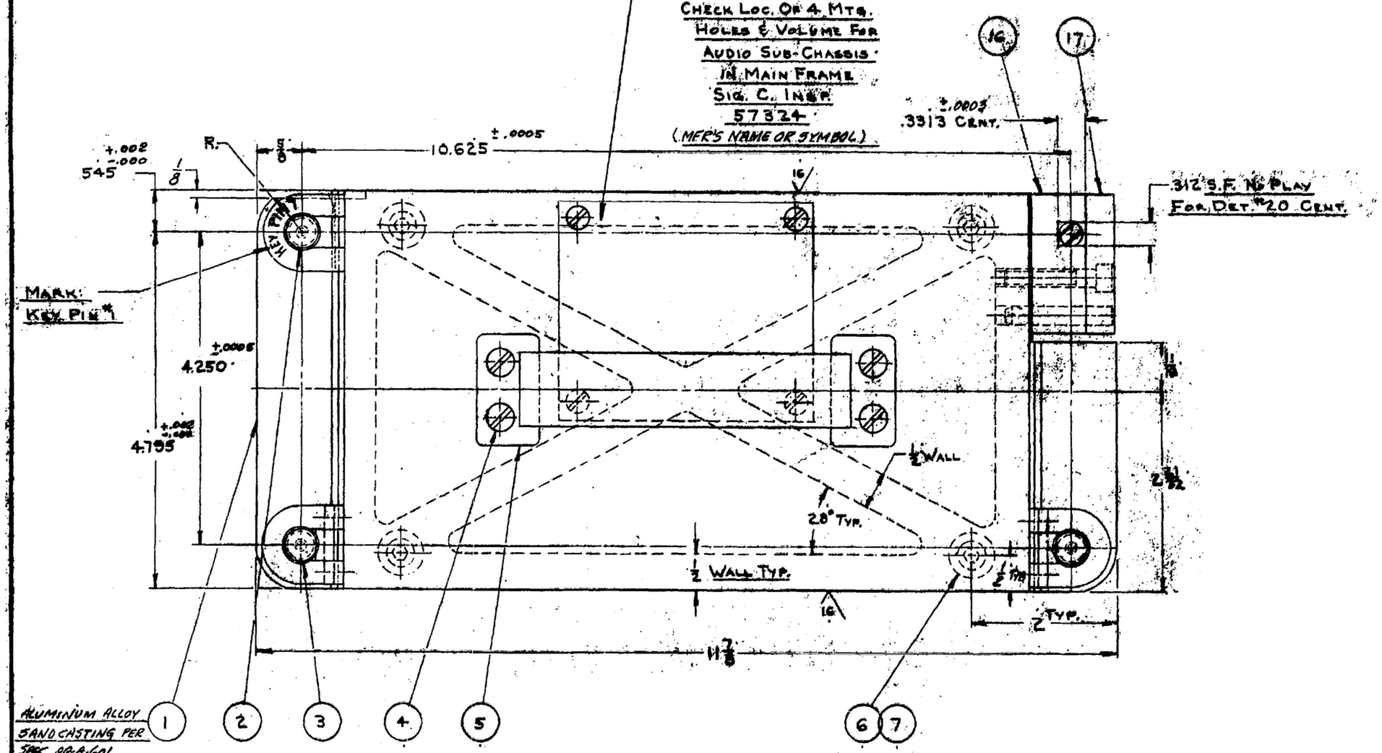

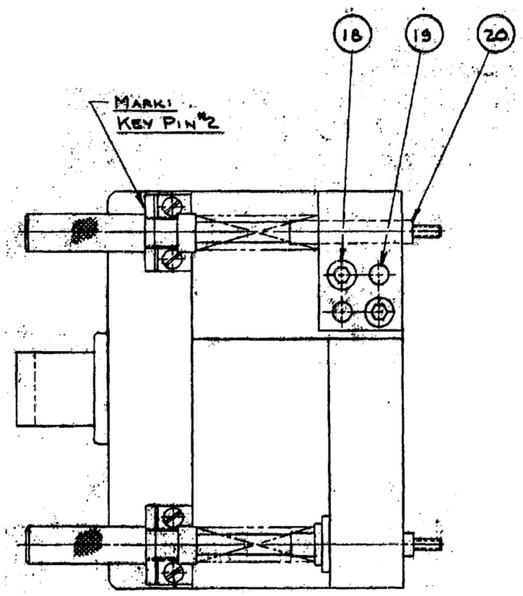

NOTES:
SUPPLIED BY:
1. SIEWEK TOOL CO. 2862 E. GRAND BLVD. DETROIT 2, MICHIGAN. OR EQUAL
2. ACME INDUSTRIAL COMPANY, 200 N. LAFLIN STREET CHICAGO 7, ILLINOIS. OR EQUAL MONROE G-4122
3. H.E. MONROE CO. 485 DOUGLAS AVENUE HOLLAND, MICHIGAN. OR EQUAL
4. THE STANLEY WORKS NEW BRITAIN, CONN. OR EQUAL
5. THIS GAGE WILL CHECK SM-D-248782

A PROTECTIVE FINISH PER SPEC. MIL-C-10924 (ORD) SHALL BE APPLIED TO NON-FUNCTIONING, NON-GAGING & NON-LOCATING SURFACES TO PREVENT CORROSION. BLACK OR GRAY COLORS ARE PREFERRED.

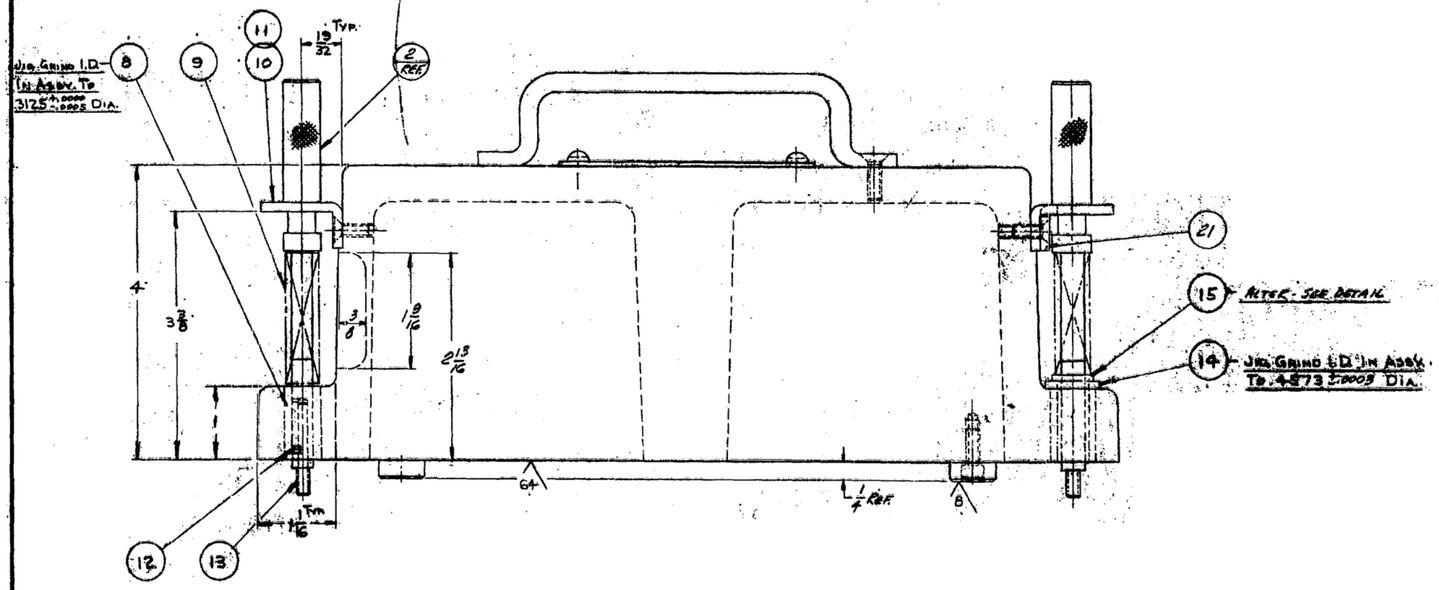

ITEM	QUAN	PART NO.	DESCRIPTION	MATL	MATL SPEC	NOTES
21	3		21 BRACKET 1/8 x 3/4 MP. x 1 1/16	AL ALLOY		
20	1		20 PIN 1/2 DIA. x 5 1/4			
19	2		19 1/4 DIA. x 1 1/2 DOWEL			
18	2		18 1/4-20 x 1 1/4 SOC. HD. SCR.			
17	1		17 PLATE 3/8 x 1 1/8 x 1 3/8			
16	1		16 BLOCK 3/4 x 1 1/8 x 1 3/8	STEEL		
15	2		15 [illegible]			2
14	2		14 [illegible]			5
13	4		13 #8-32 GO THD. PLUG GAGE			3
12	4		12 #4-40 x 3/32 SOC. SET SCR.			
11	8		11 #8-32 x 1/2 FLAT HD. SCR.			
10	4		10 BRACKET 1/8 x 1 1/16 x 1 3/8 MP.	AL ALLOY		
9	4		9 SPRING TO SUIT	WIRE	QQ-W-474	
8	1		8 [illegible]			2
7	4		7 #10-32 x 1/2 SOC. HD. SCR.			
6	4		6 STEVENS BURTON JIG FOOT #12720			1
5	1		5 SPACER PARALLEL	STEEL		4
4	4		4 #8-32 x 1/8 FLAT HD. SCR.			
3	2		3 PIN 1/2 DIA. x 5 1/4			
2	1		2 PIN 1/2 DIA. x 5 1/4			
1	1	SM-D-57324-1	SAND CASTING	AL ALLOY		

LIST OF MATERIAL

		UNLESS OTHERWISE SPECIFIED DIMENSIONS ARE IN INCHES TOLERANCES ON FRACTIONS DECIMALS ANGLES ± 1/32
		SC-DL-57324
NEXT ASSY	USED ON	
APPLICATION		

Contract No. DA 36-039 SC-78312
Order No. 08719-PH-55-93
SIGNAL CORPS
REVIEWED PME
APPROVED PME
DATE 15-10-55

VOLUME GAGE
FOR MAIN FRAME TO CHECK 4 MOUNTING HOLES FOR AUDIO SUB CHASSIS.

SCALE FULL

DEPARTMENT OF THE ARMY
SIGNAL CORPS ENGINEERING LABORATORIES
FORT MONMOUTH NEW JERSEY

SM-D-57324
SHEET 1 OF 2

WHEN REFERRING TO THIS DRAWING STATE DRAWING NO., APPLICABLE ISSUE & ... IF ANY, ... DATE.

NOTE:
*FOR INFORMATION ONLY, CONTRACTOR MAY AT HIS OPTION DEVIATE FROM THESE PROCESS DETAILS

REVISIONS ORIGINAL ISSUE "A" 15-10-55

SYM	DESCRIPTION	DATE	APPROVAL

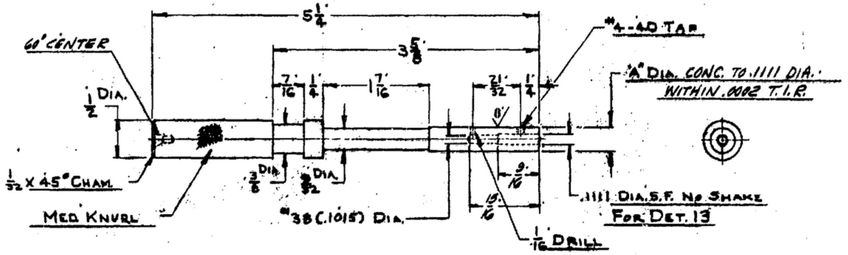

PIN

(2) 1 REQ. - STEEL - FS-A2 - PER SPEC. QQ-S-00778 ROCK "C" 62 MIN. "A" = .3125 DIA. S.F. IN DET. 8

(3) 2 REQ. - STEEL - FS-A2 - PER SPEC. QQ-S-00778 ROCK "C" 62 MIN. "A" = .2907 DIA. S.F. IN DET. 15

(20) 1 REQ. - STEEL - FS-A2 PER SPEC. QQ-S-00778 ROCK "C" 62 MIN. "A" = .312 ±.0003 DIA.

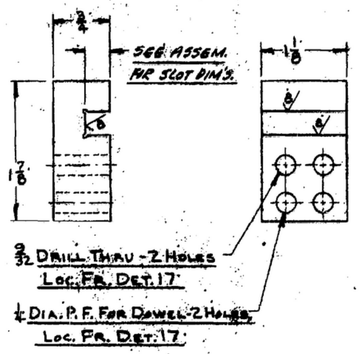

BLOCK

(16) 1 REQ. - STEEL - FS-A2 - PER SPEC QQ-S-00778 ROCK "C" 62 MIN.

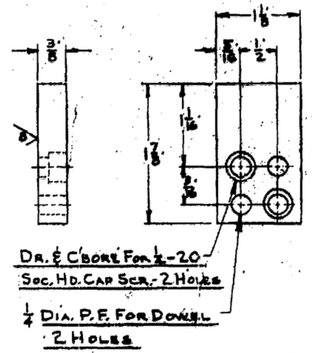

PLATE

(17) 1 REQ. - STEEL - FS-A2 - PER SPEC QQ-S-00778 ROCK "C" 62 MIN.

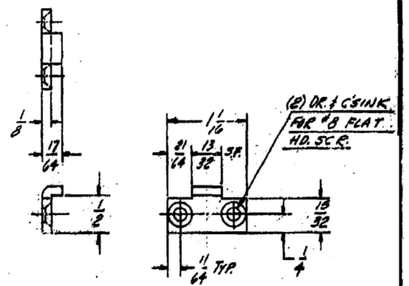

BRACKET

(21) 3 REQ. - ALUMINUM ALLOY 52-SH-34 TEMPER "0" PER SPEC. QQ-A-318

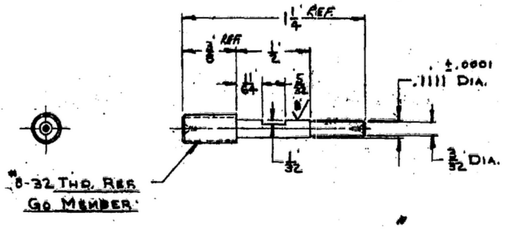

THREAD PLUG

(13) 4 REQ. - PURCH. - ALTER SCALE 2:1

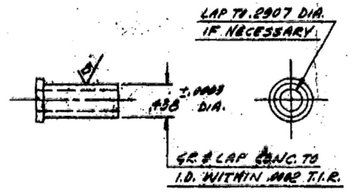

DRILL BUSHING

(15) 2 REQ. PURCH. (ALTER AS SHOWN)

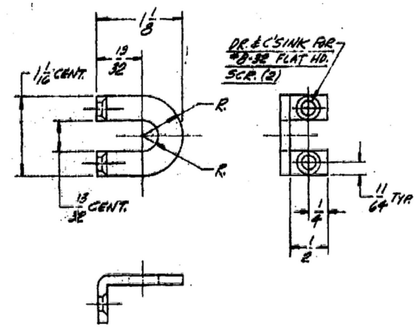

BRACKET

(10) 4 REQ. - ALUMINUM - AL (52-SH-34) TEMPER "0" PER SPEC. QQ-A-318

PART NO.	DESCRIPTION	MATL	MATL SPEC

LIST OF MATERIAL

		UNLESS OTHERWISE SPECIFIED DIMENSIONS ARE IN INCHES TOLERANCES ON FRACTIONS ±1/32 DECIMALS ANGLES	~~Goelitz Radio Co.~~ ORDER# 08719-PH-55-93
			SIGNAL CORPS
			REVIEWED PME
	SC-DL-57392		APPROVED PME
NEXT ASSY	USED ON		DATE 15-10-55
APPLICATION			

VOLUME GAGE.
FOR MAIN FRAME TO CHECK 4 MOUNTING HOLES FOR AUDIO SUB CHASSIS.

SCALE FULL

DEPARTMENT OF THE ARMY SIGNAL CORPS ENGINEERING LABORATORIES
FORT MONMOUTH NEW JERSEY

SM-D-57325
SHEET 2 OF 2

WHEN